Supplementary Document:
Deeply Learning the Messages in Message Passing Inference

Guosheng Lin, Chunhua Shen, Ian Reid, Anton van den Hengel
The University of Adelaide, Australia; and Australian Centre for Robotic Vision
E-mail: {guosheng.lin,chunhua.shen,ian.reid,anton.vandenhengel}@adelaide.edu.au

This document contains the following contents:

1. Figure 1 shows the illustration of Network $C^{(1)}$ for generating multi-scale feature map.
2. Figure 2 shows the illustration of Network $C^{(2)}$ for generating message vector.
3. Figure 3 shows the illustration of building pairwise connections.
4. Figure 4 shows the network layer configuration.
5. Figure 5 shows some prediction examples of our method for semantic segmentation.

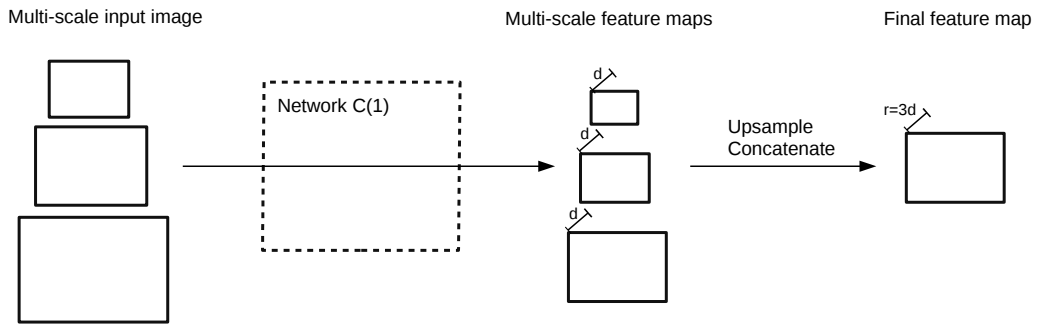

Figure 1: Illustration of Network $C^{(1)}$ for generating multi-scale feature map.

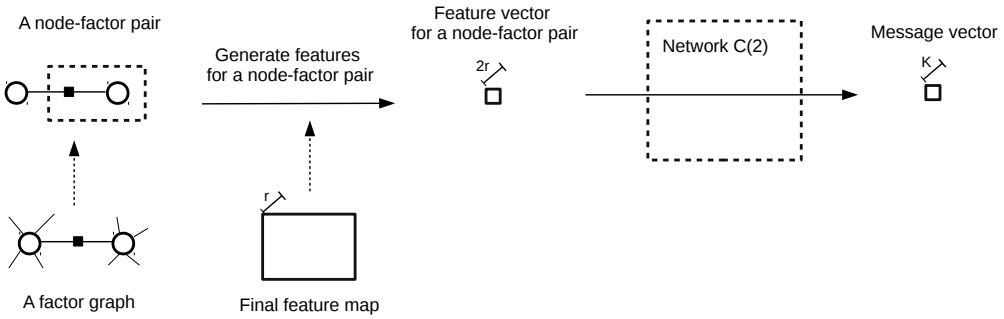

Figure 2: Illustration of Network $C^{(2)}$ for generating message vector.

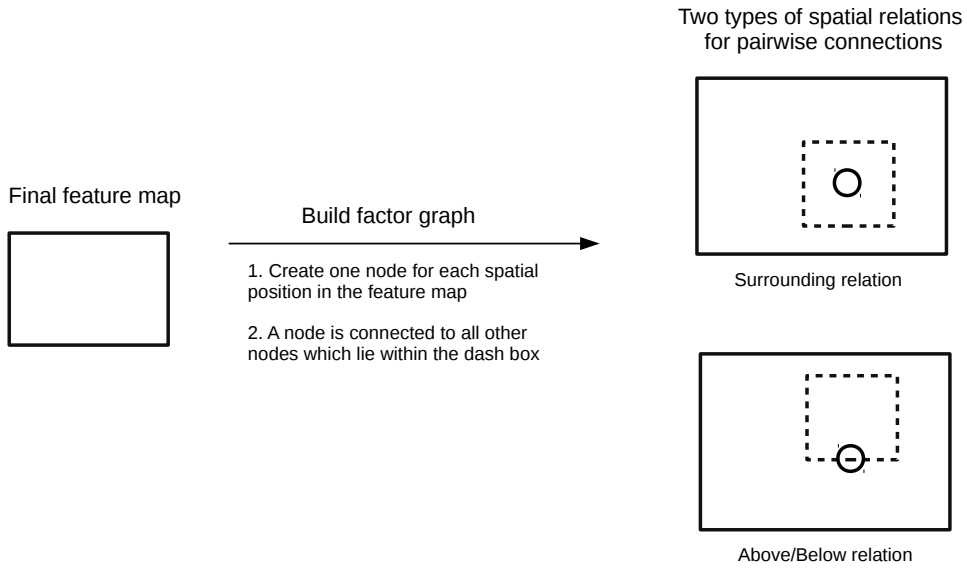

Figure 3: Illustration of building pairwise connections. We denote by a the length of the shortest edge of the feature map. The size of the range box (dash box in the figure) size is $0.4a \times 0.4a$. For the surrounding relation, the range box is centered on the node. For the above/below relation, the bottom edge of the range box is centered on the node.

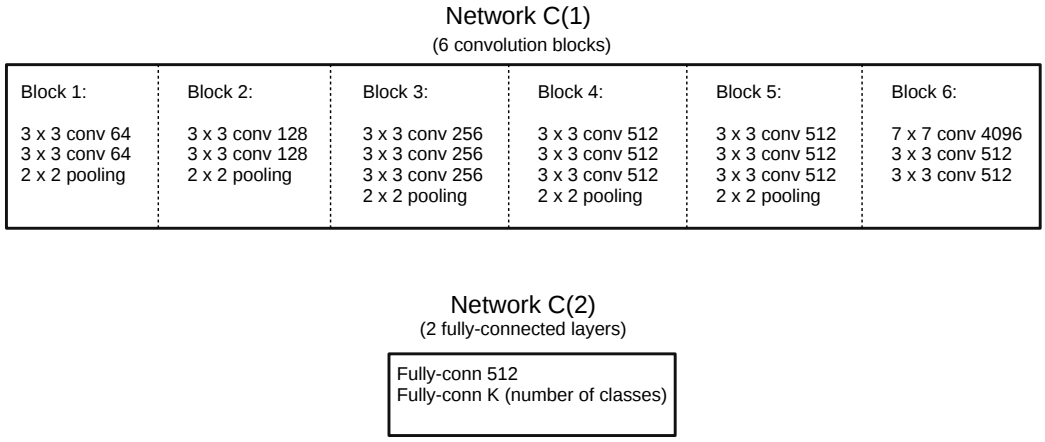

Figure 4: Network layer configuration. The top 5 convolution blocks share the same configuration as the convolution blocks in the VGG-16 network. The stride of the last max pooling layer is 1, and for other max pooling layers we use the same stride setting as that of the VGG-16 network.

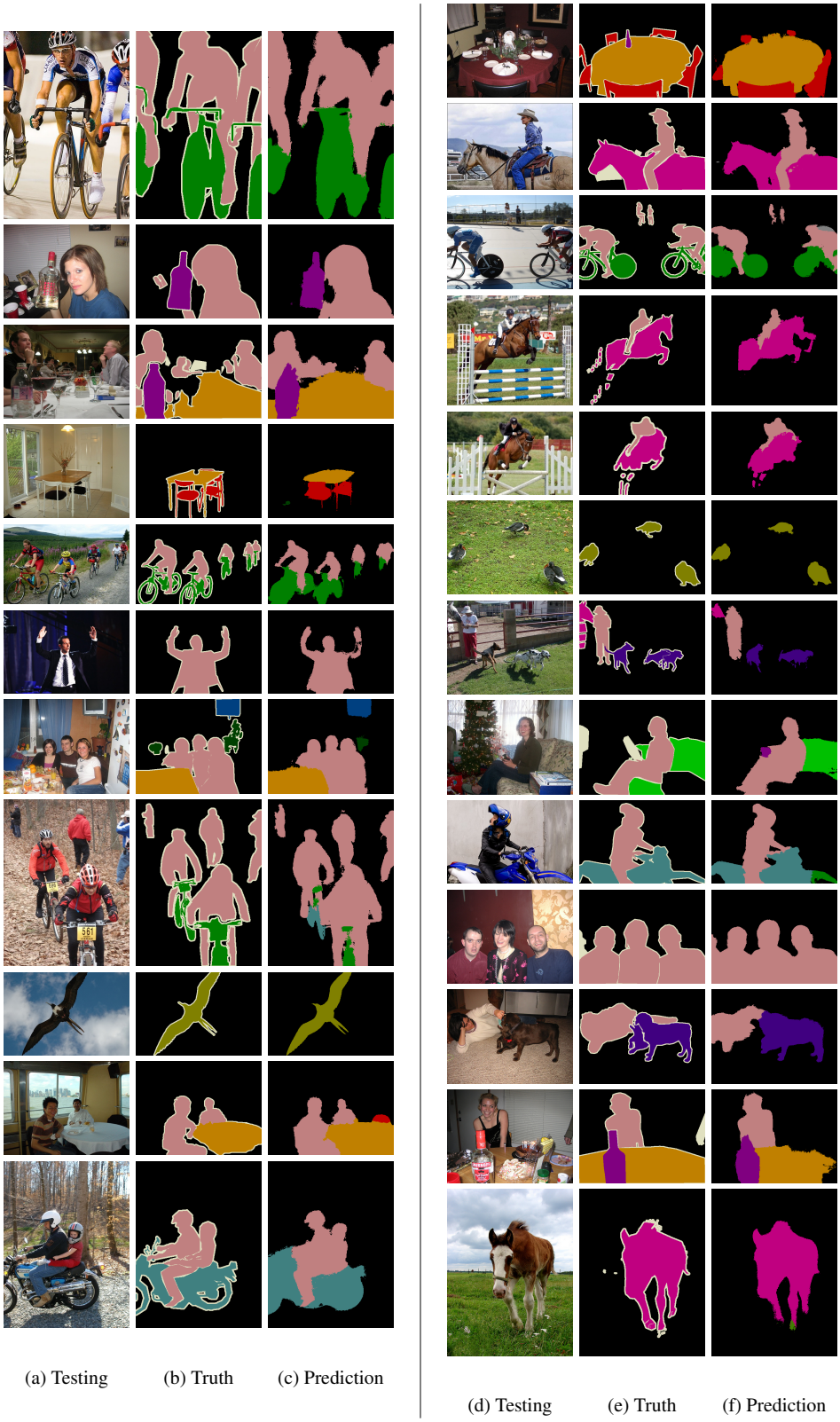

(a) Testing (b) Truth (c) Prediction

(d) Testing (e) Truth (f) Prediction

Figure 5: Some prediction examples of our method.